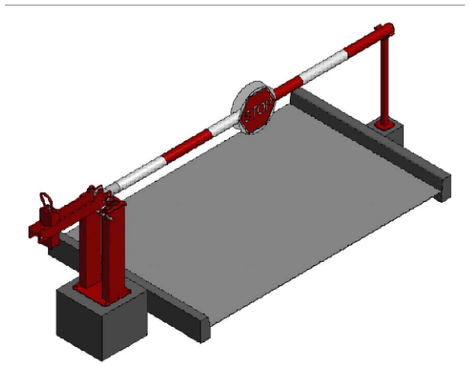

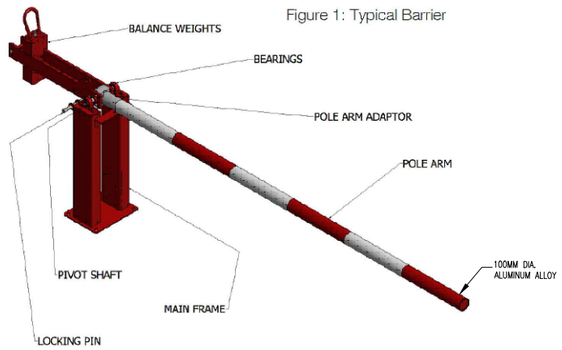

1 A-7a MANUAL BOOM BARRIER
SCALE NTS

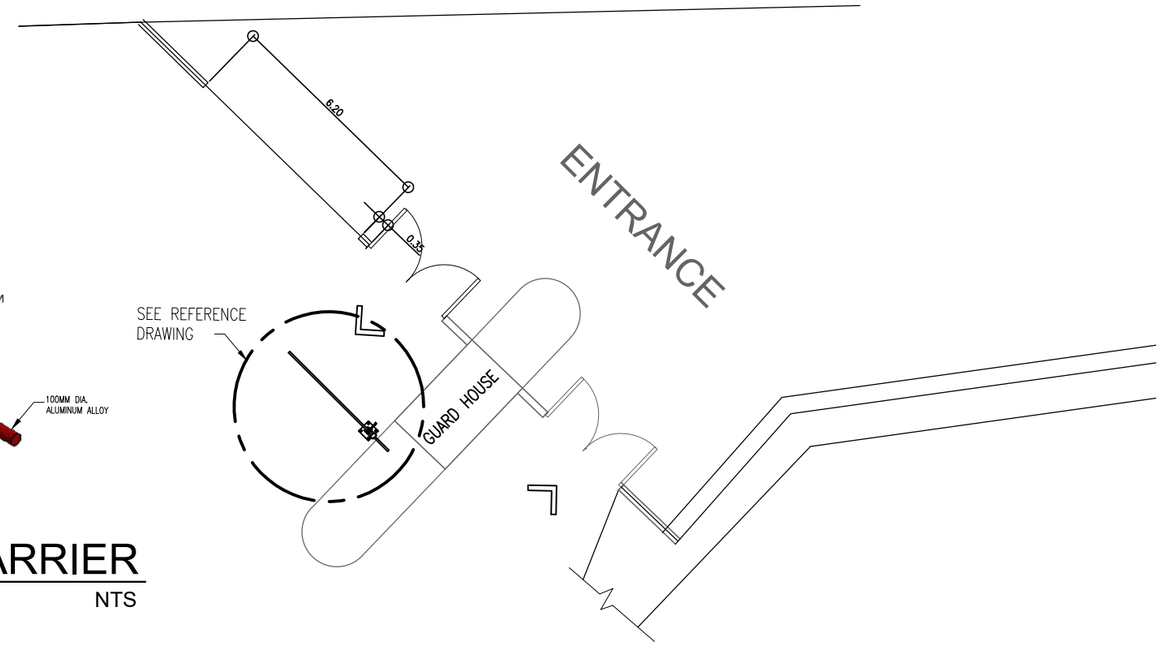

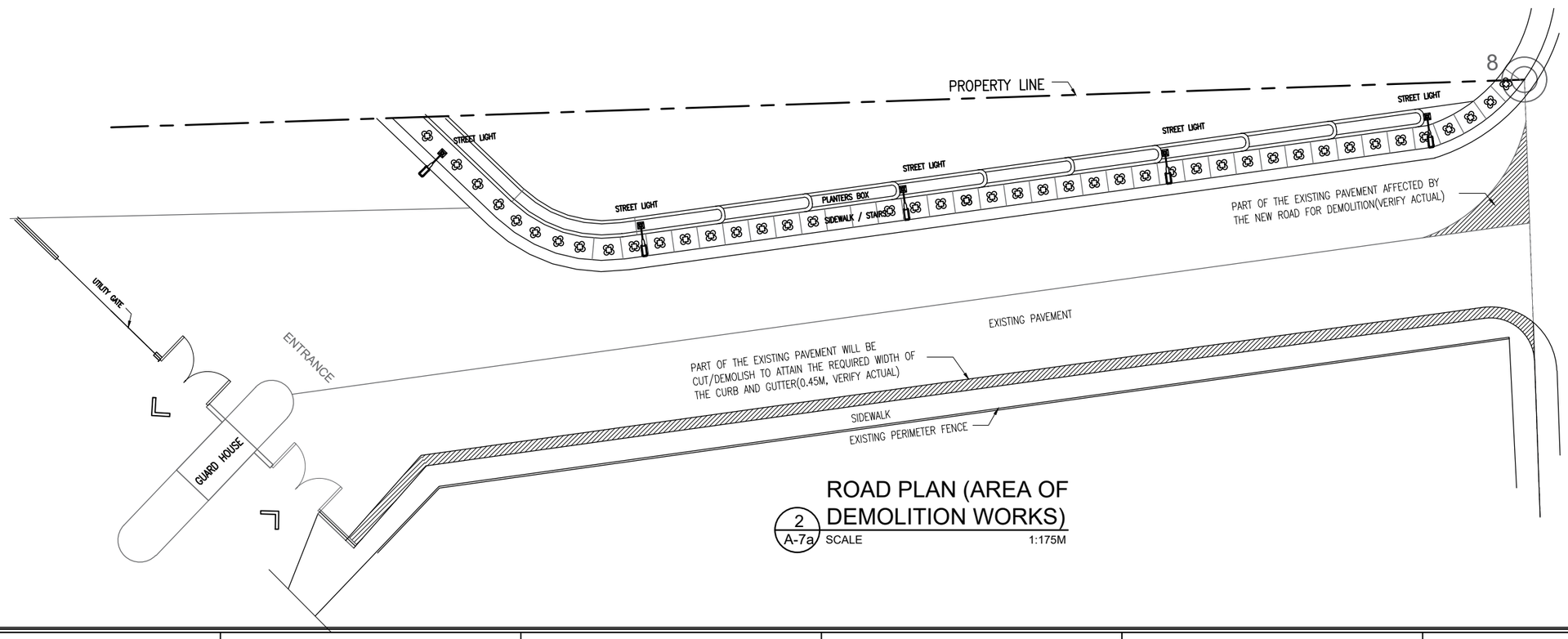

2 A-7a ROAD PLAN (AREA OF DEMOLITION WORKS)
SCALE 1:175M

OWNER:	Project Title:	Prepared by:	Recommending approval by:	Approved by:	Sheet Content:	Sheet No.	
Republic of the Philippines DEPARTMENT OF SCIENCE AND TECHNOLOGY Philippine Science High School MIMAROPA Region Campus Brgy. Rizal, Odiongan, Romblon 5505	**IMPLEMENTATION OF THE PROJECT: SITE DEVELOPMENT (2023)**	PLANNING TEAM	Meriam F. Fallar FAD Chief	Glenn A. Atienza OIC - Campus Director	As Shown	A	
	Location: Brgy. Rizal, Odiongan Romblon 5505	Date Prepared:	Date:	Date:		7.a	7